ILLUMRA
CLASSROOM CONTROL SYSTEM

ALWAYS INSTALL DEVICES IN ACCORDANCE WITH
LOCAL ELECTRICAL CODES AND REGULATIONS

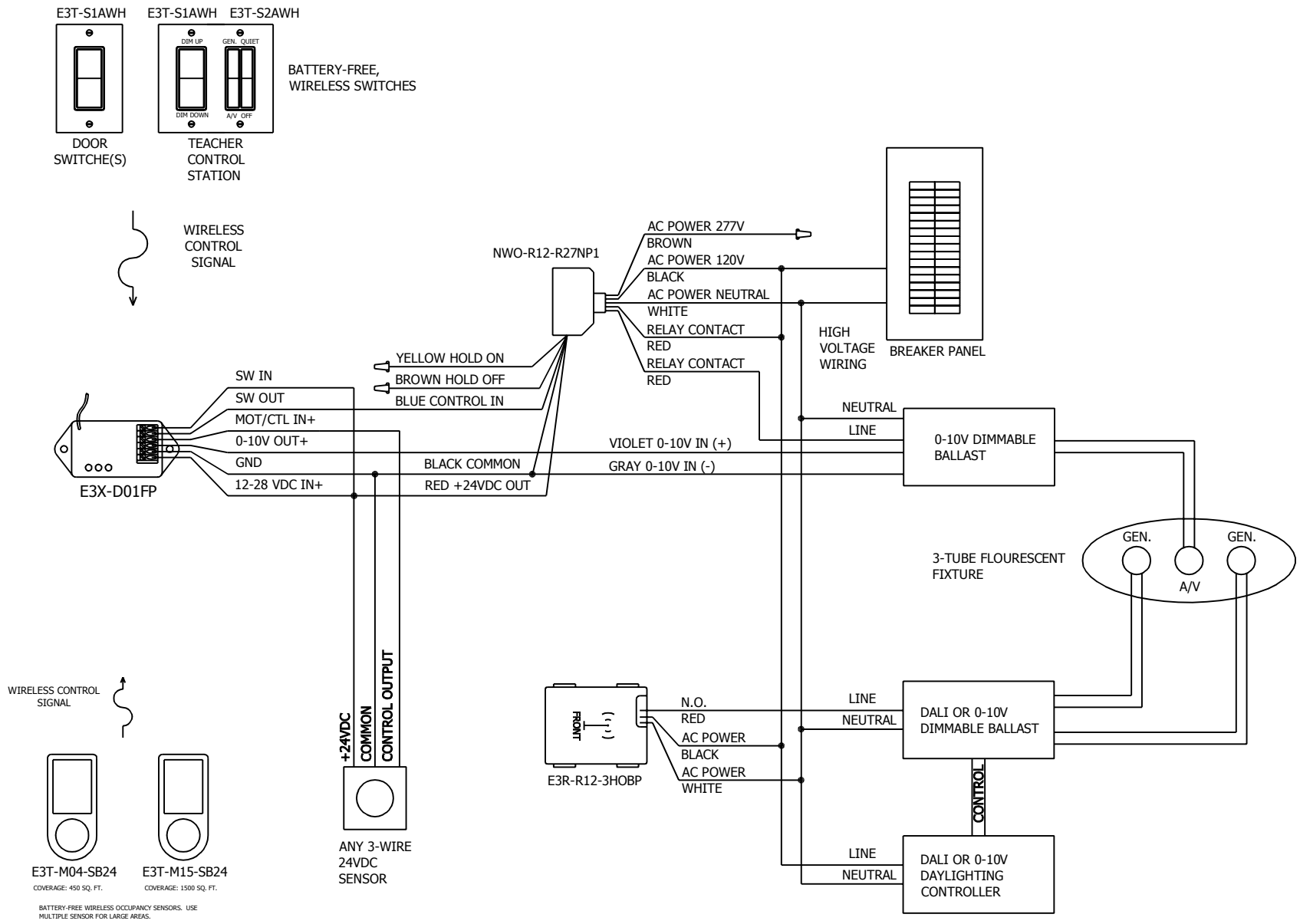

Copyright 2009 ILLUMRA www.ILLUMRA.com Sales@ILLUMRA.com Info@ILLUMRA.com T: (801) 349-1200 F: (801) 653-4257

ILLUMRA™
SELF-POWERED WIRELESS CONTROLS